ZF4HP18 (EAGLE,DODGE)

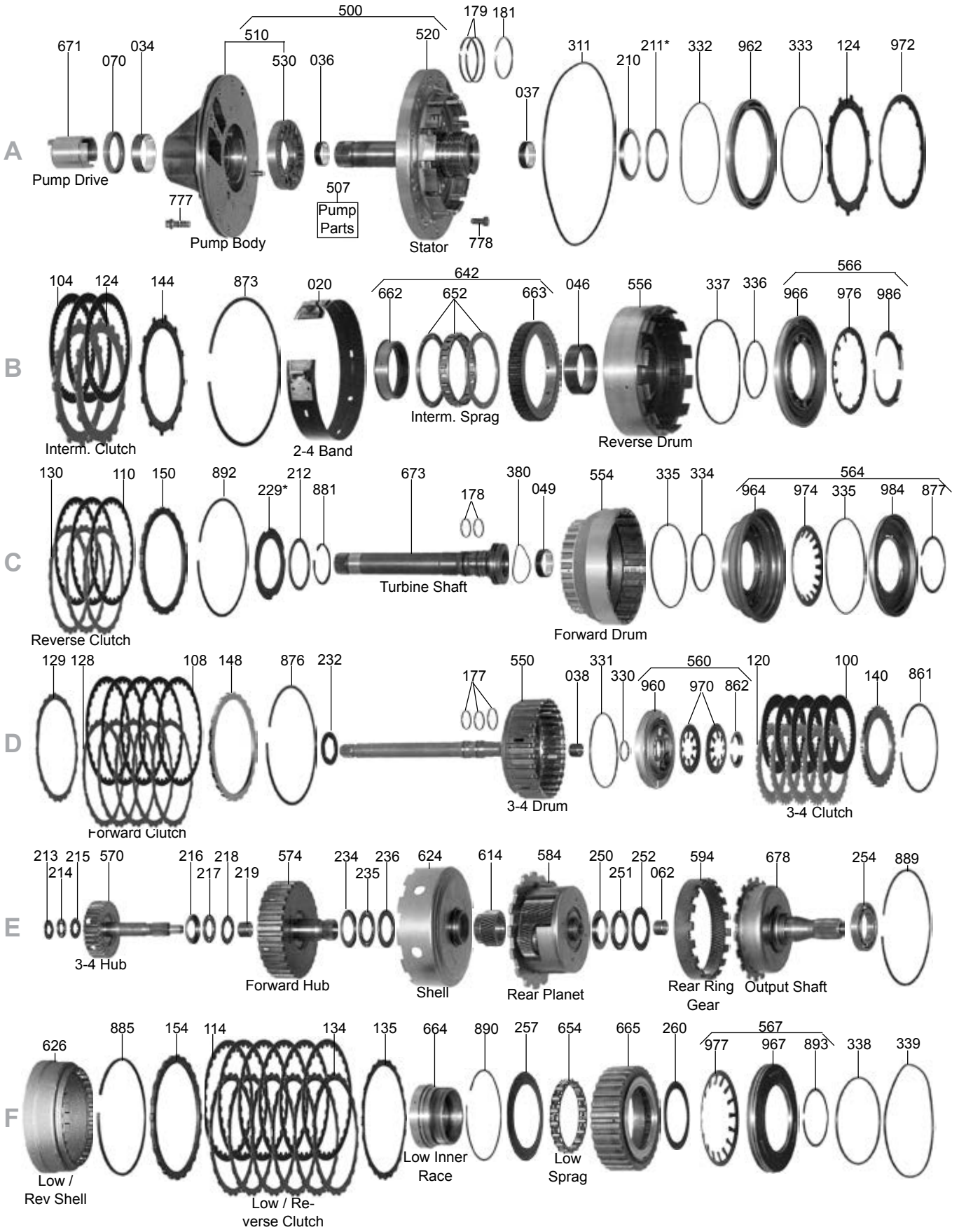
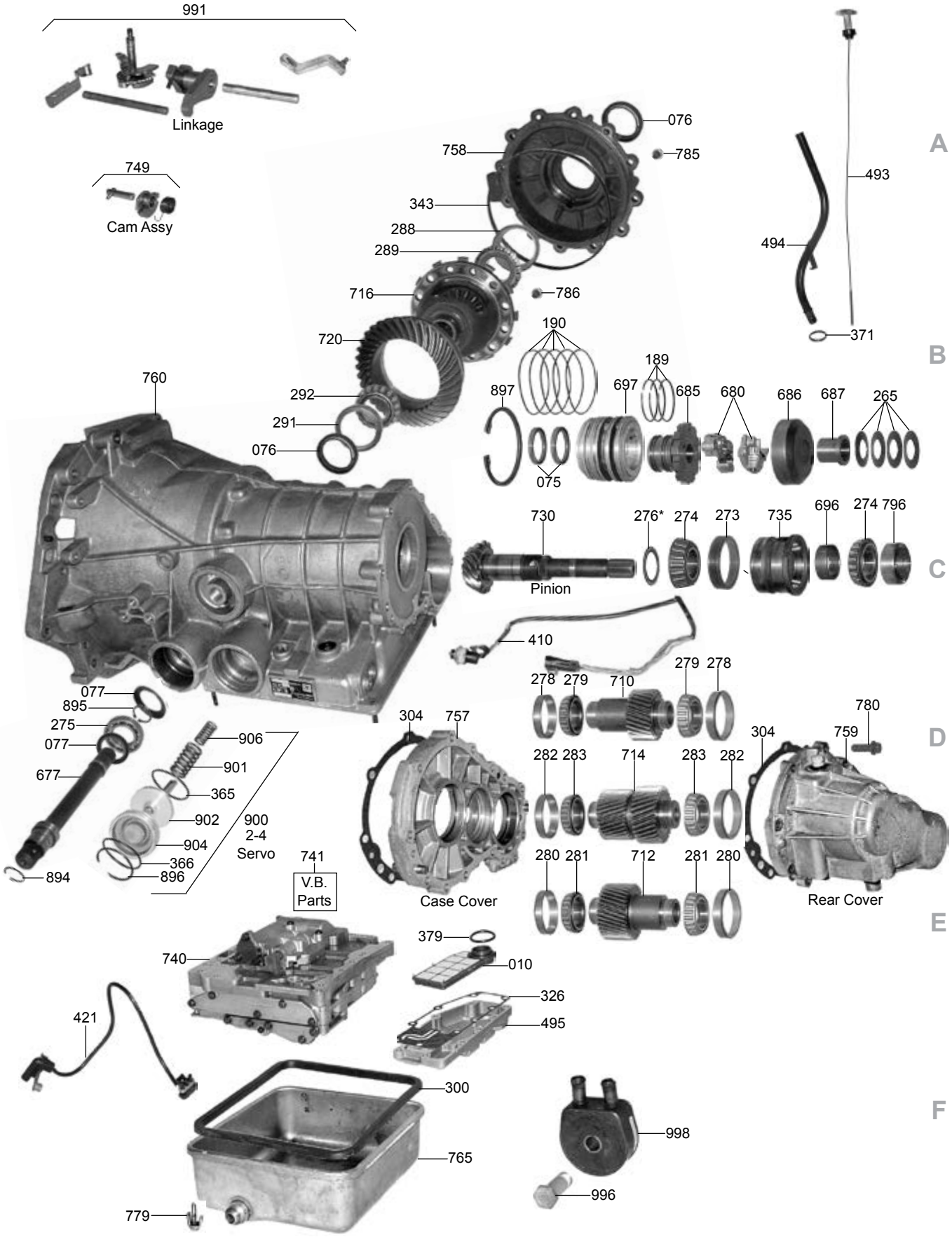
ZF4HP18 (EAGLE,DODGE)