U140, U240, U241

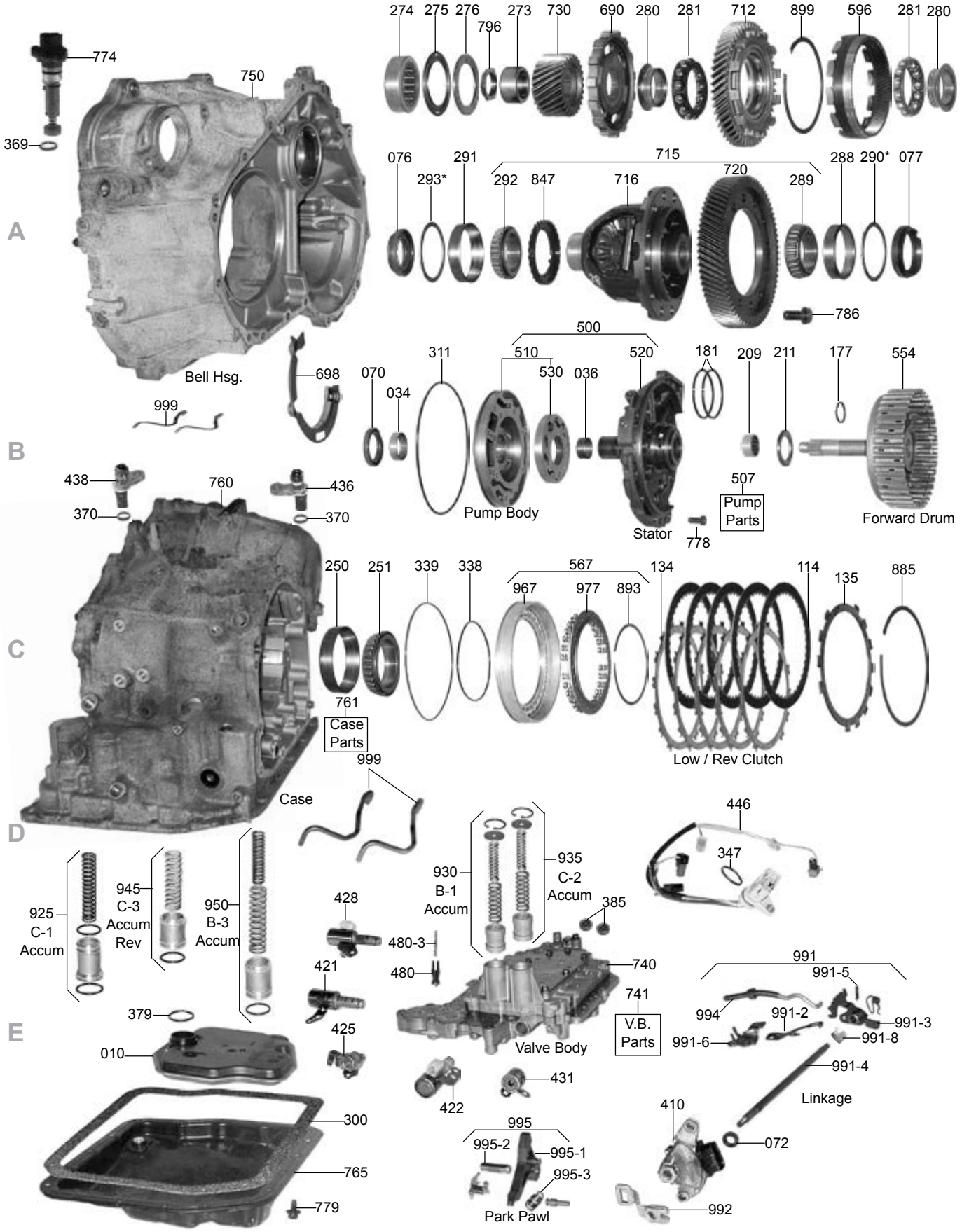
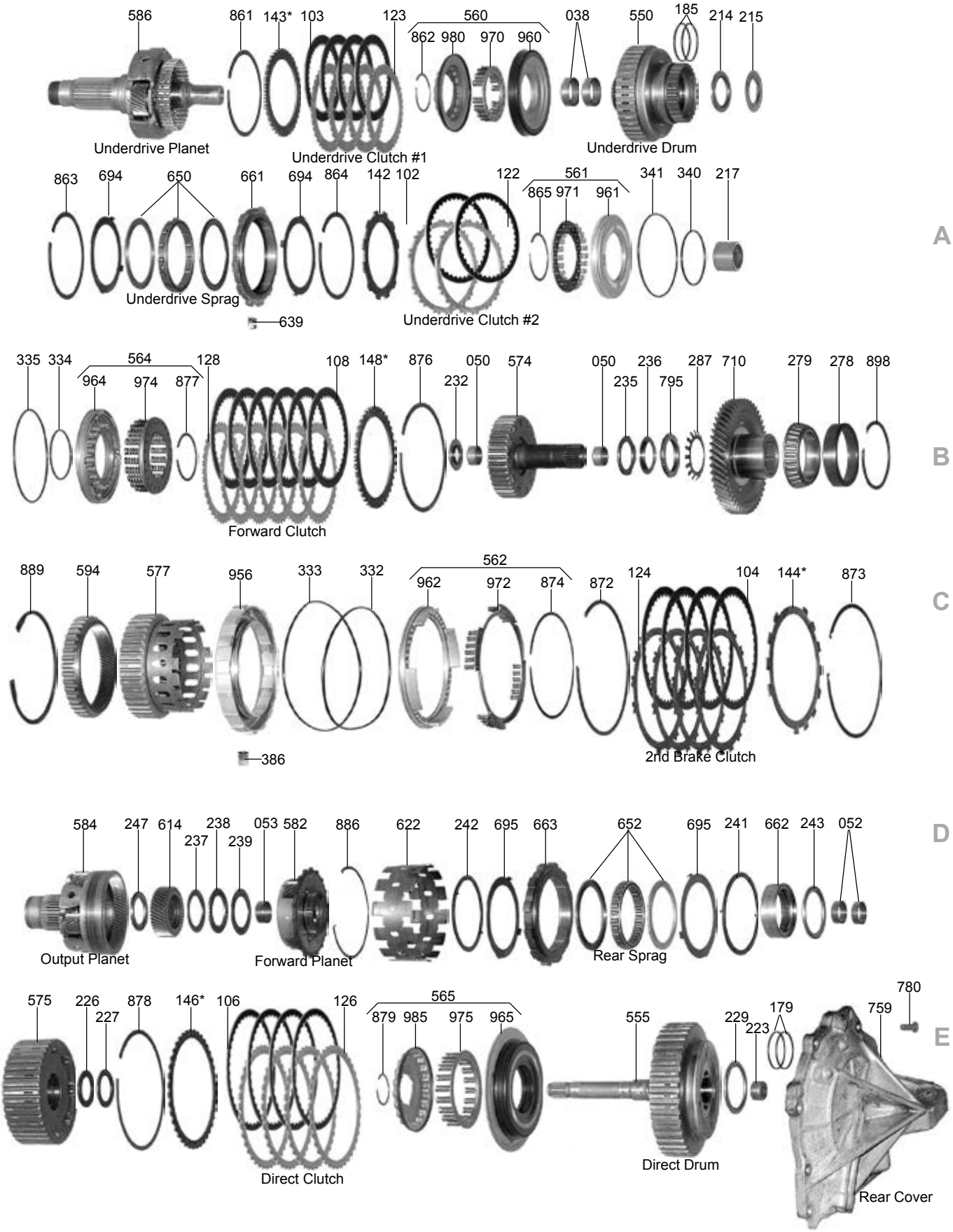
U140, U240, U241