RL4R01A, RE4R01A, RE4R03A, R4A-EL

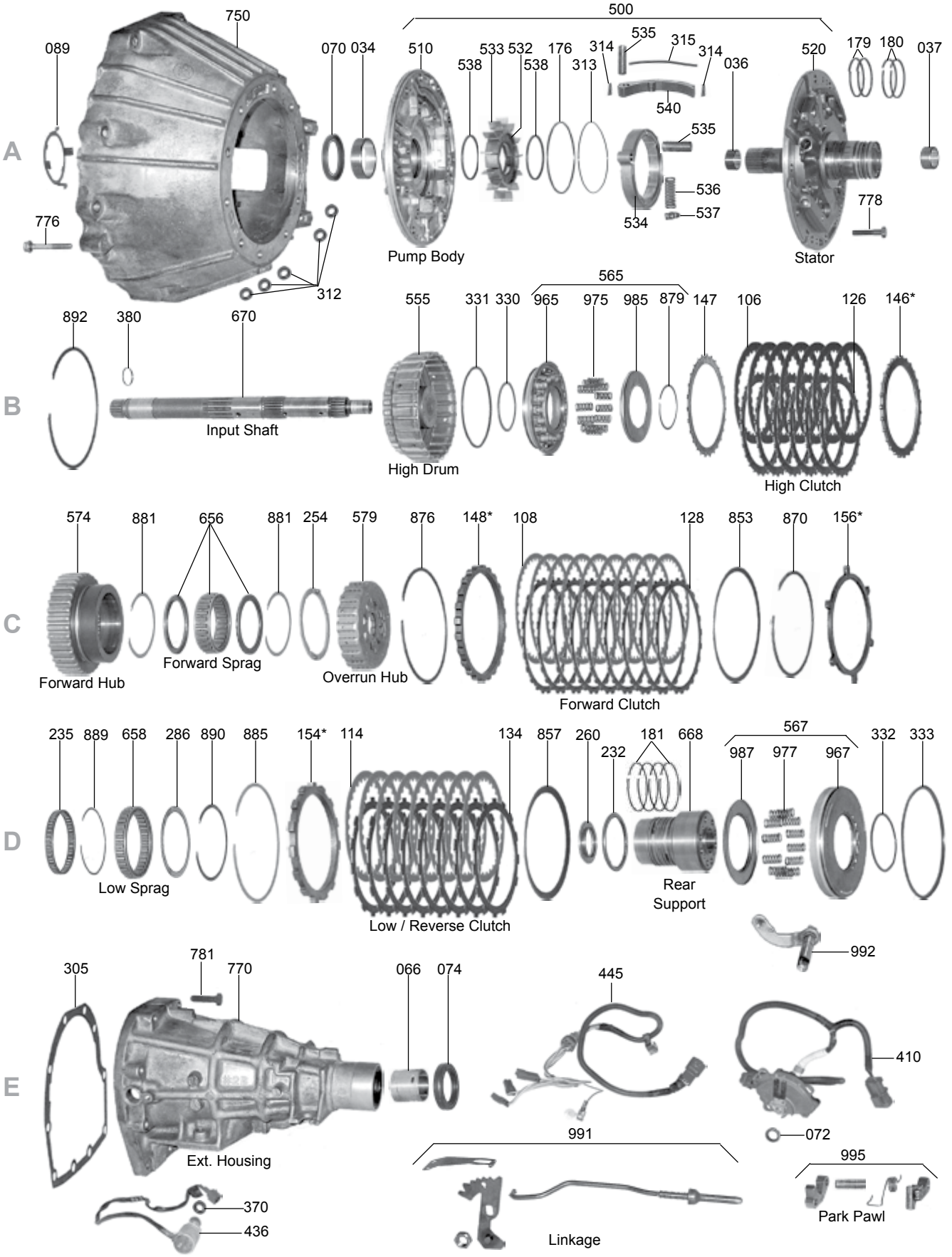
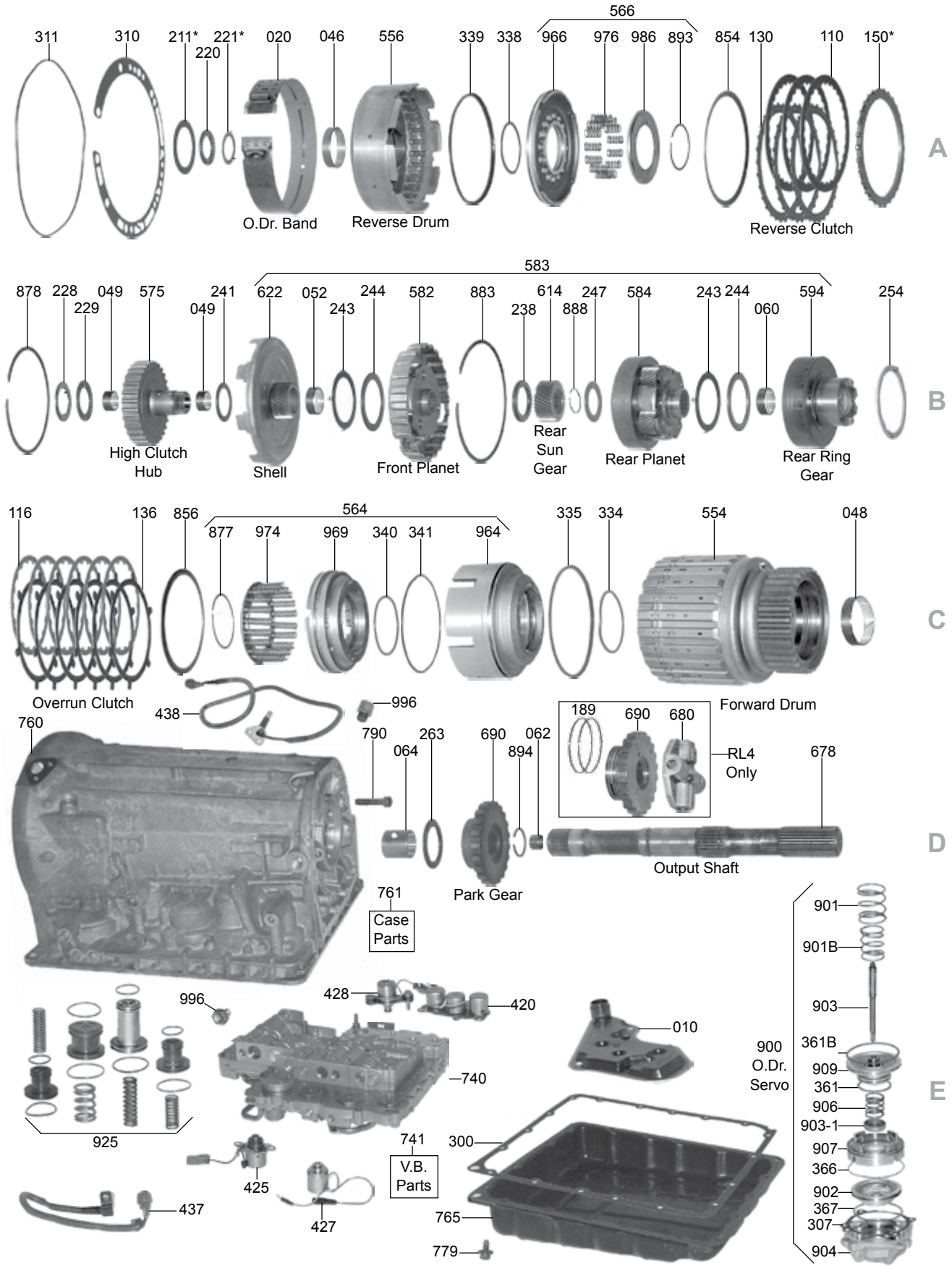
RL4R01A, RE4R01A, RE4R03A, R4A-EL