KM170 - KM177

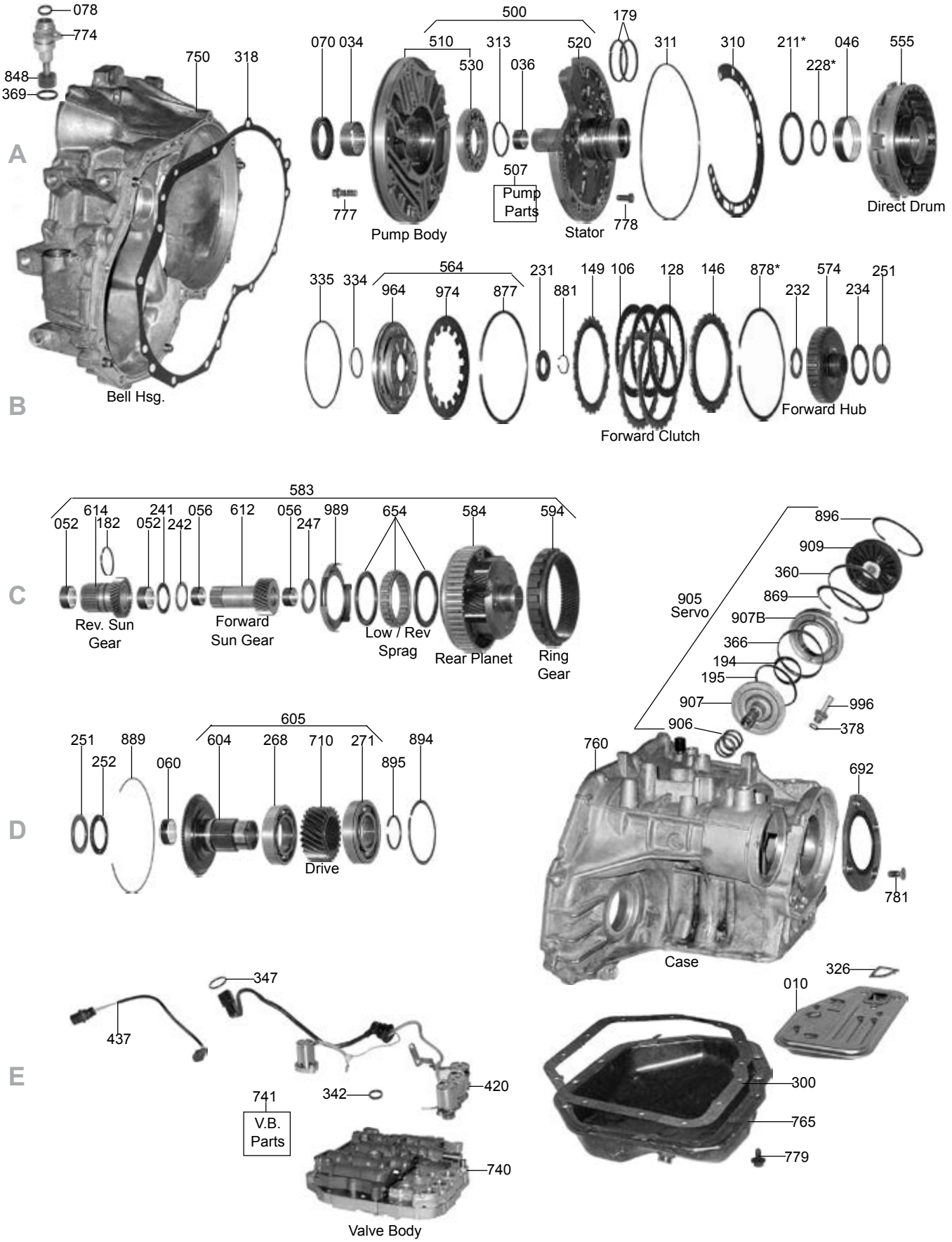
A
078
774
848
369
750
318
Bell Hsg.
500
070 034
510
530
313
036
520
179
311
310
211*
228*
046
555
507
Pump Parts
777
Pump Body
Stator
778
Direct Drum
B
564
335 334
964
974
877
231
881
149
106
128
146
878*
232
574
234
251
Forward Clutch
Forward Hub
C
583
052
614
182
241
052
242
056
612
056
247
989
654
584
594
Rev. Sun Gear
Forward Sun Gear
Low / Rev Sprag
Rear Planet
Ring Gear
905 Servo
896
909
360
869
907B
366
194
195
907
906
996
378
760
692
781
Case
D
605
251
252
889
060
604
268
710
271
894
895
Drive
E
347
437
741
V.B. Parts
342
420
740
Valve Body
326
010
300
765
779

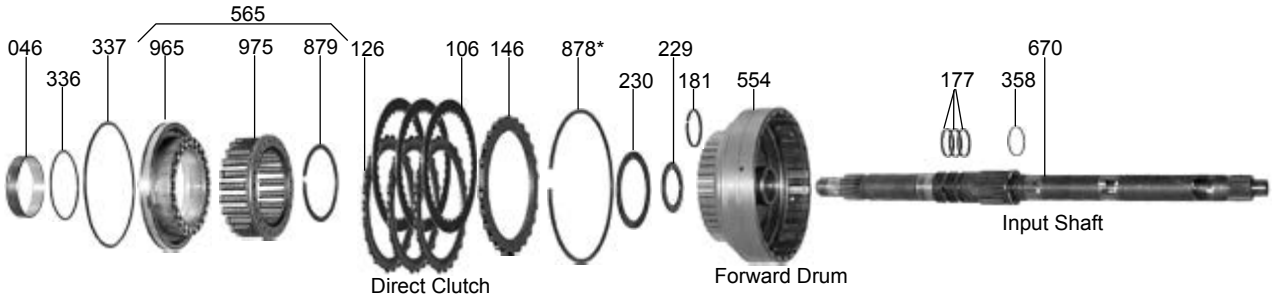
565
046
337
965
975
879
126
106
146
878*
229
670
336
230
181
554
177
358
Direct Clutch
Forward Drum
Input Shaft

A

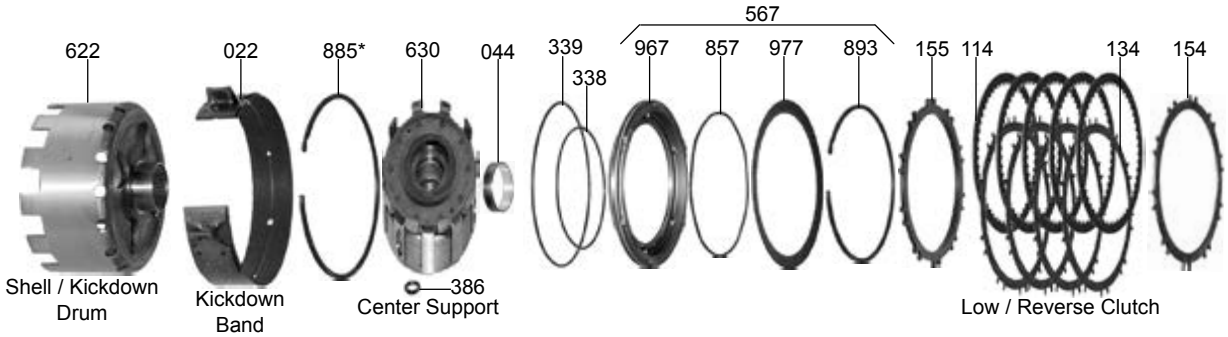
567
622
022
885*
630
044
339
967
857
977
893
155
114
134
154
338
Shell / Kickdown Drum
Kickdown Band
386
Center Support
Low / Reverse Clutch

B

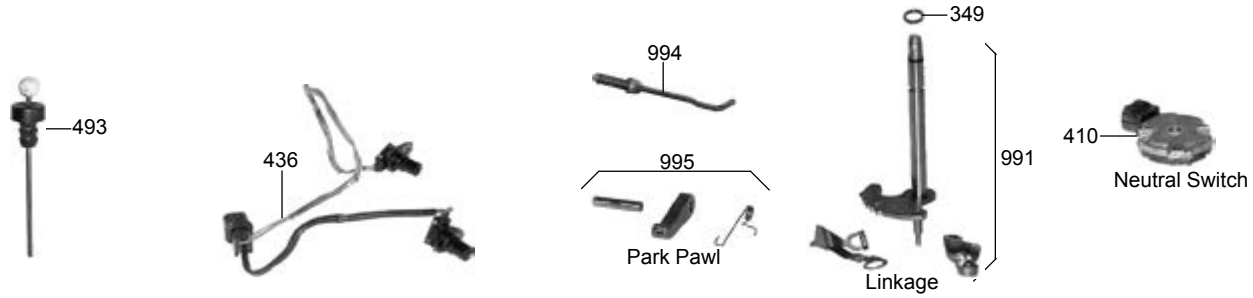
349
994
493
436
995
991
410
Park Pawl
Linkage
Neutral Switch

C

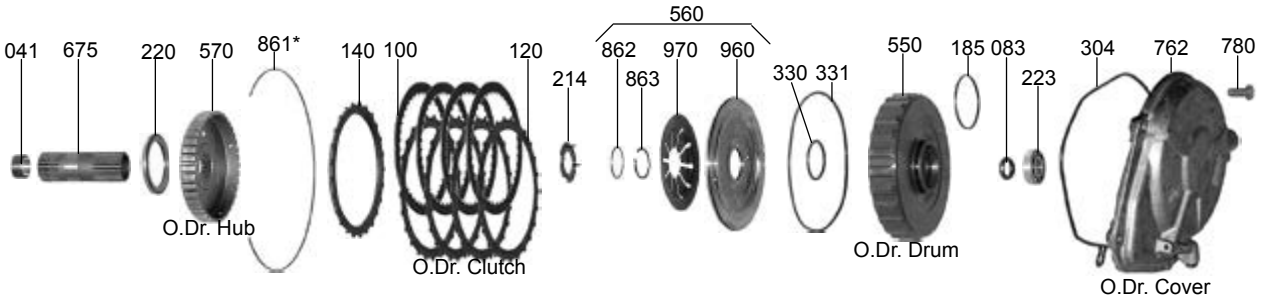
560
041
675
220
570
861*
140
100
120
862
970
960
550
185
083
304
762
780
214
863
330
331
223
O.Dr. Hub
O.Dr. Clutch
O.Dr. Drum
O.Dr. Cover

D

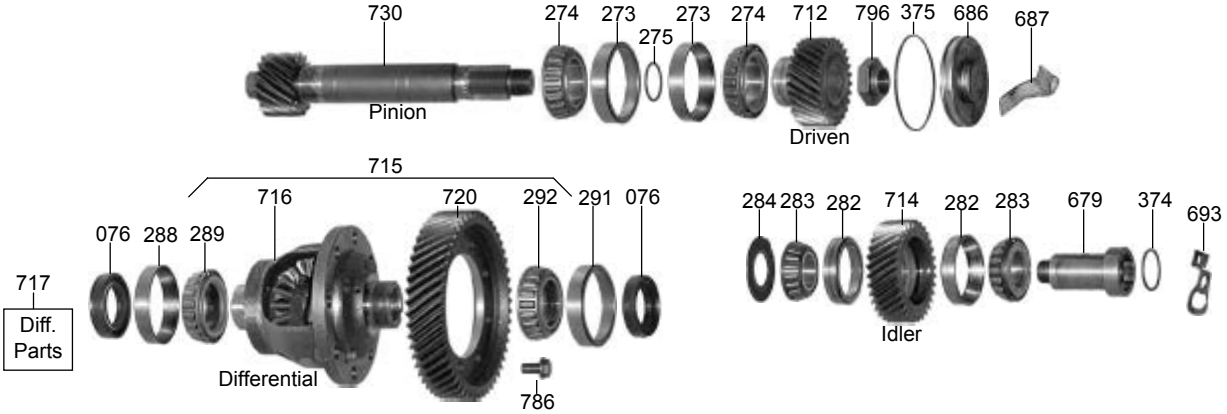
730
274
273
275
273
274
712
796
375
686
687
Pinion
Driven
715
716
720
292
291
076
076
288
289
717
Diff. Parts
Differential
786
284
283
282
714
282
283
679
374
693
Idler

E