F4A33, W4A32, W4A33

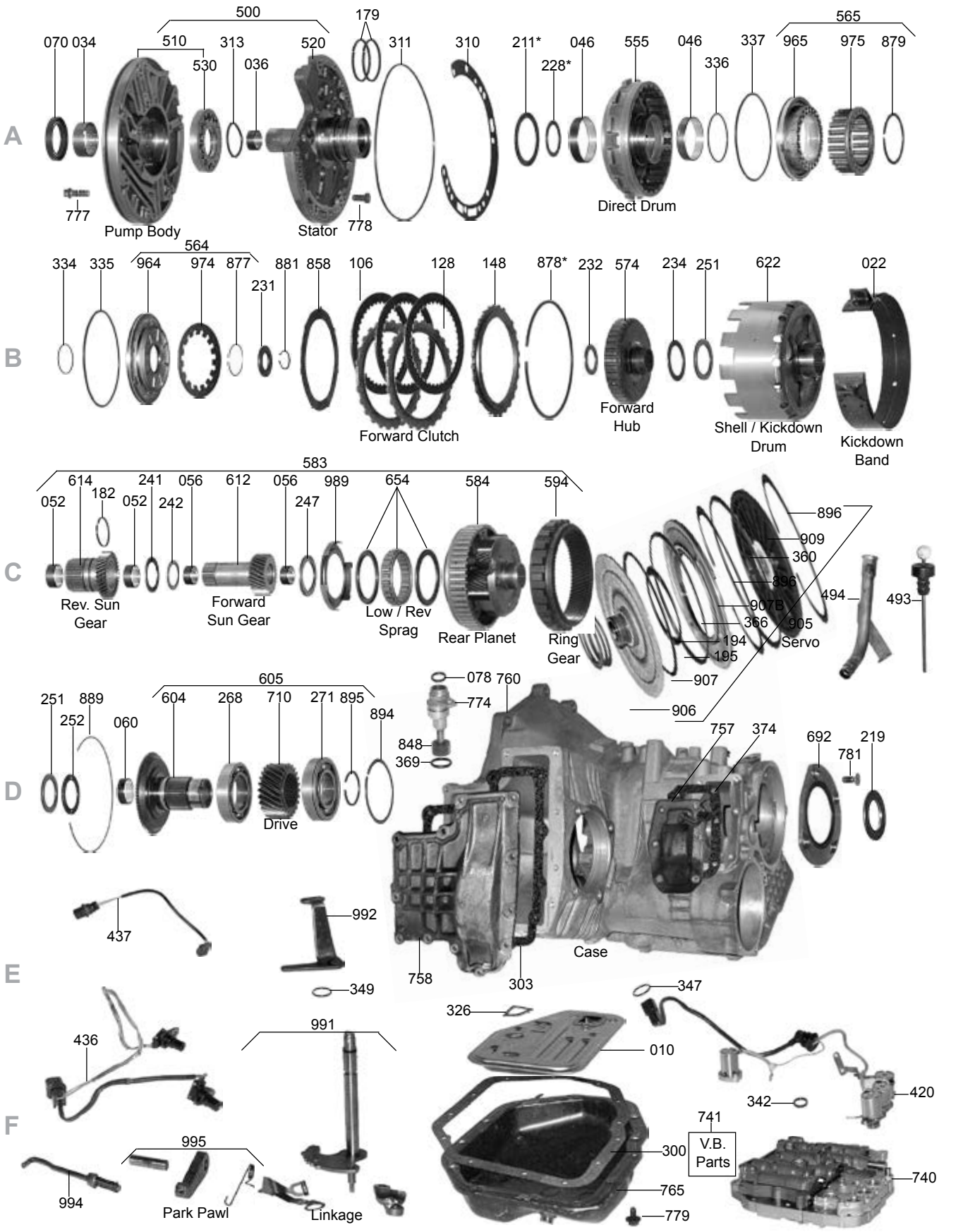
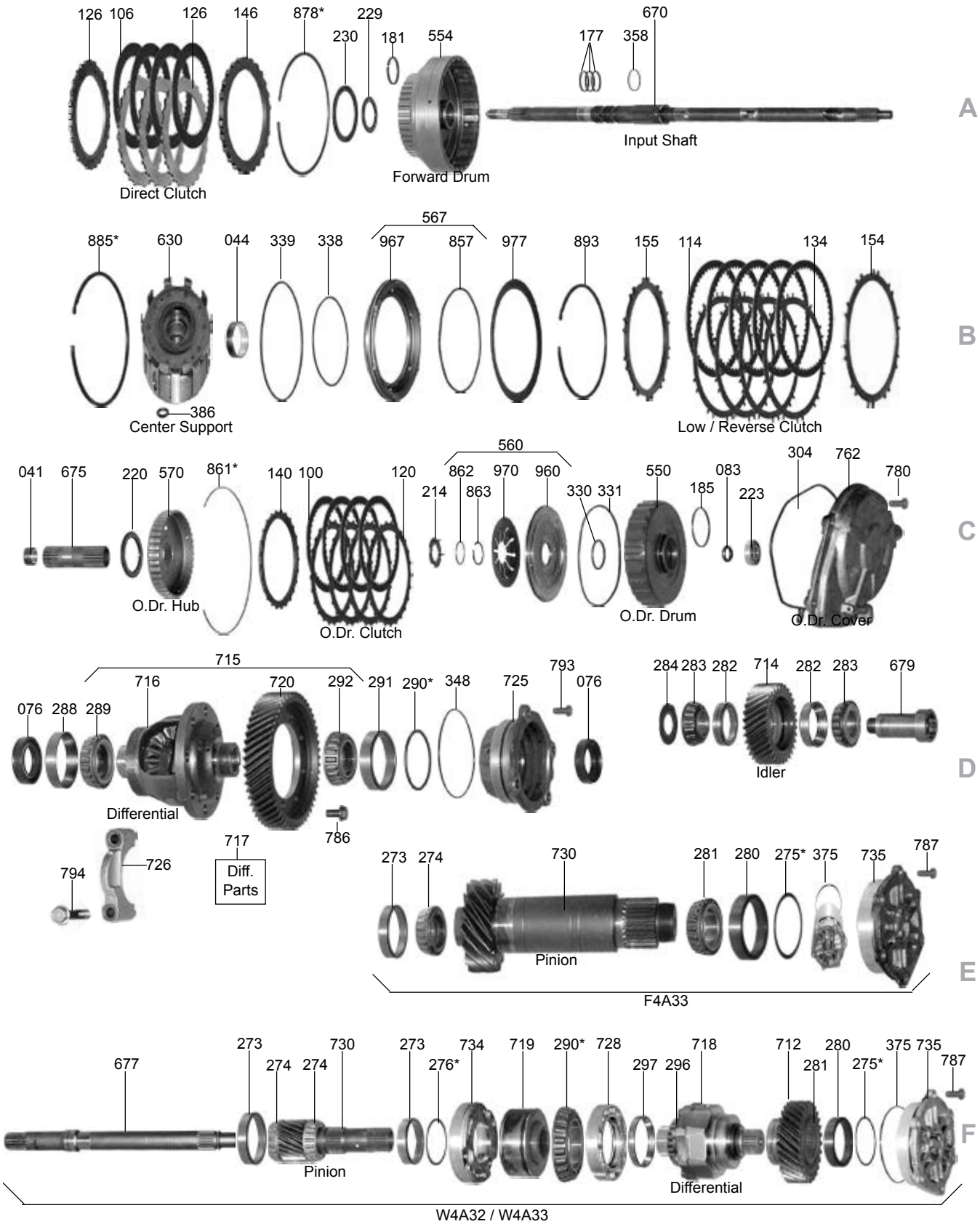
F4A33, W4A32, W4A33