ACURA 4-SPEED (M1WA, MPWA)

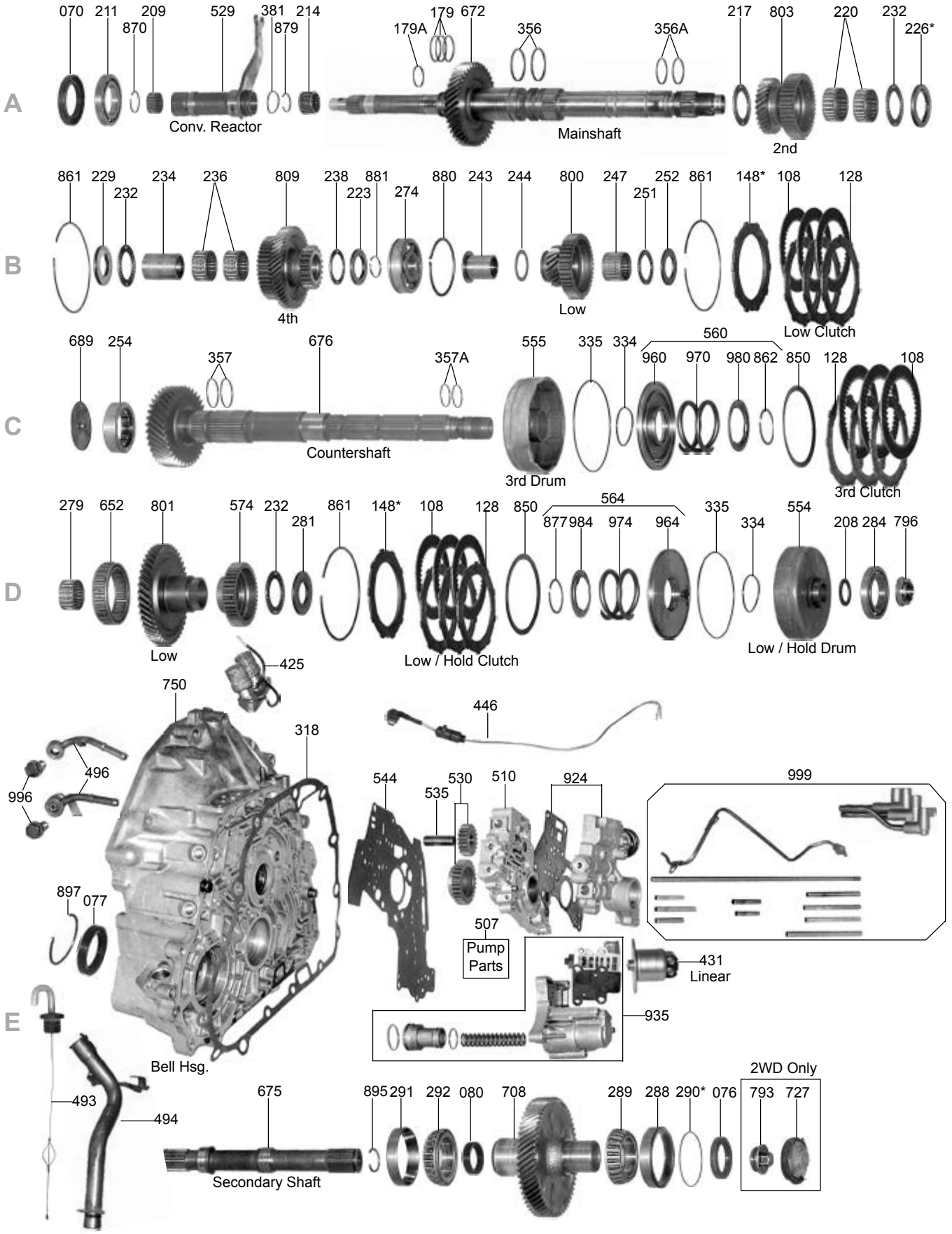
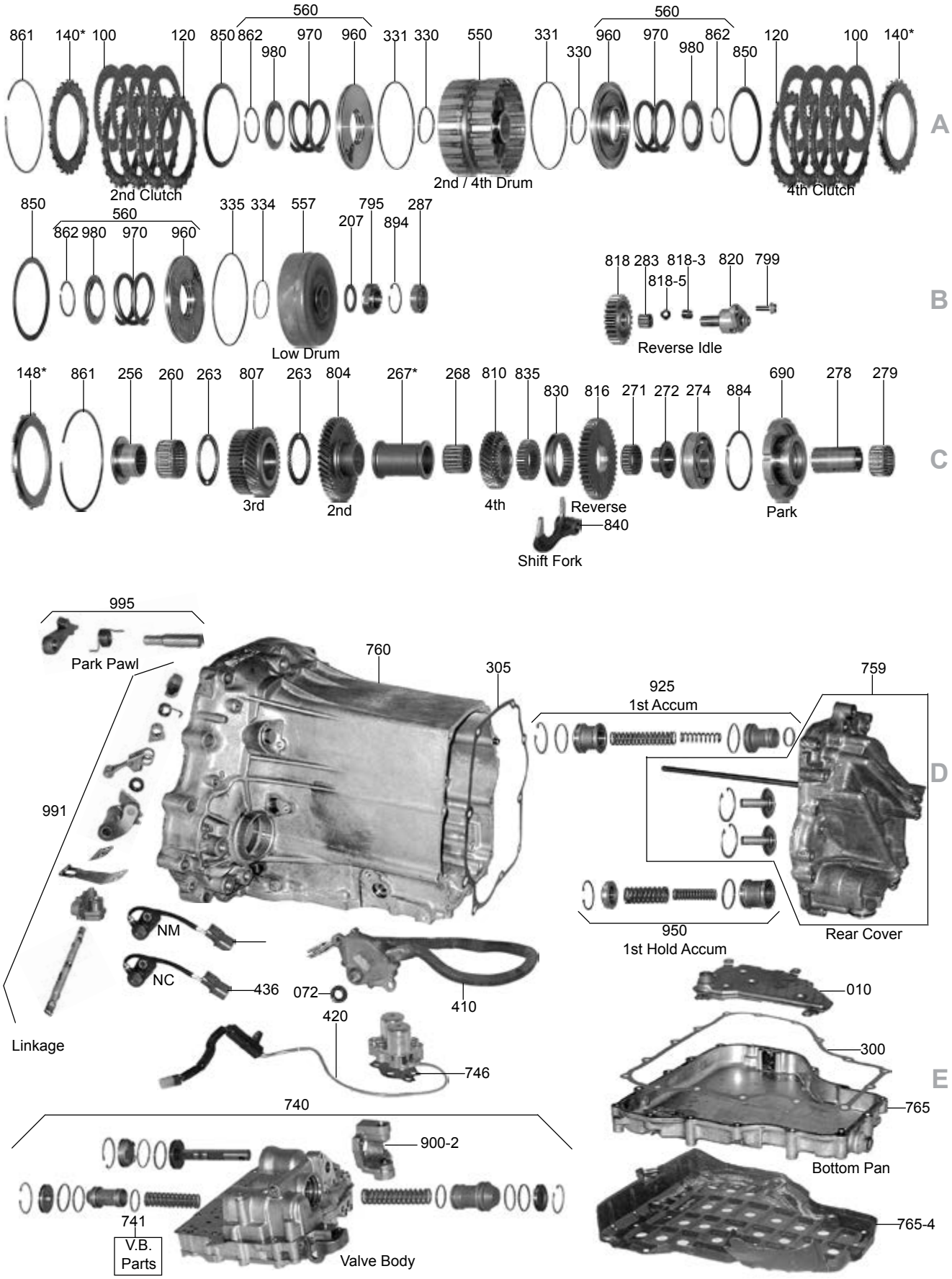
ACURA 4-SPEED (M1WA, MPWA)