AXOD, AXODE, AX4S

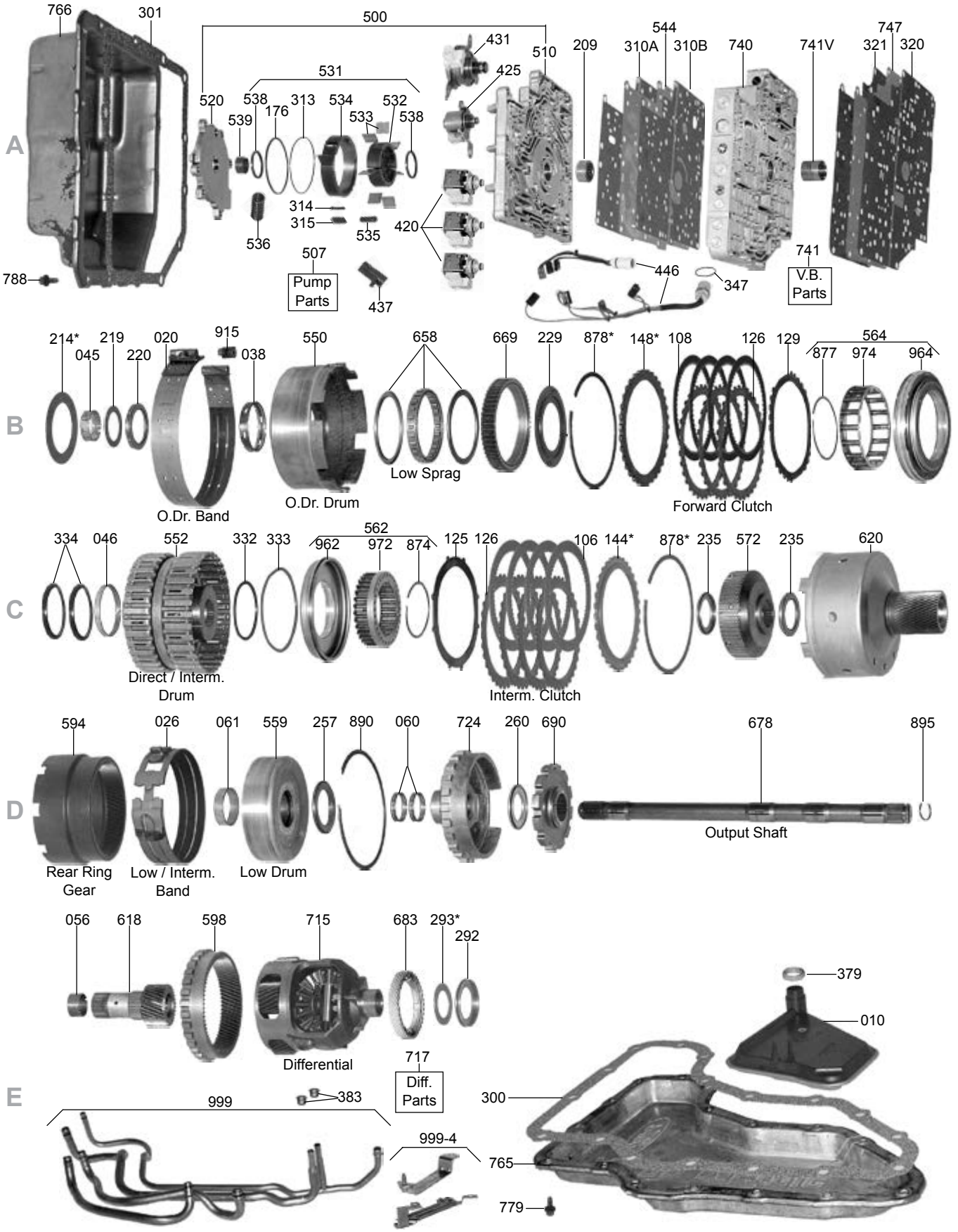

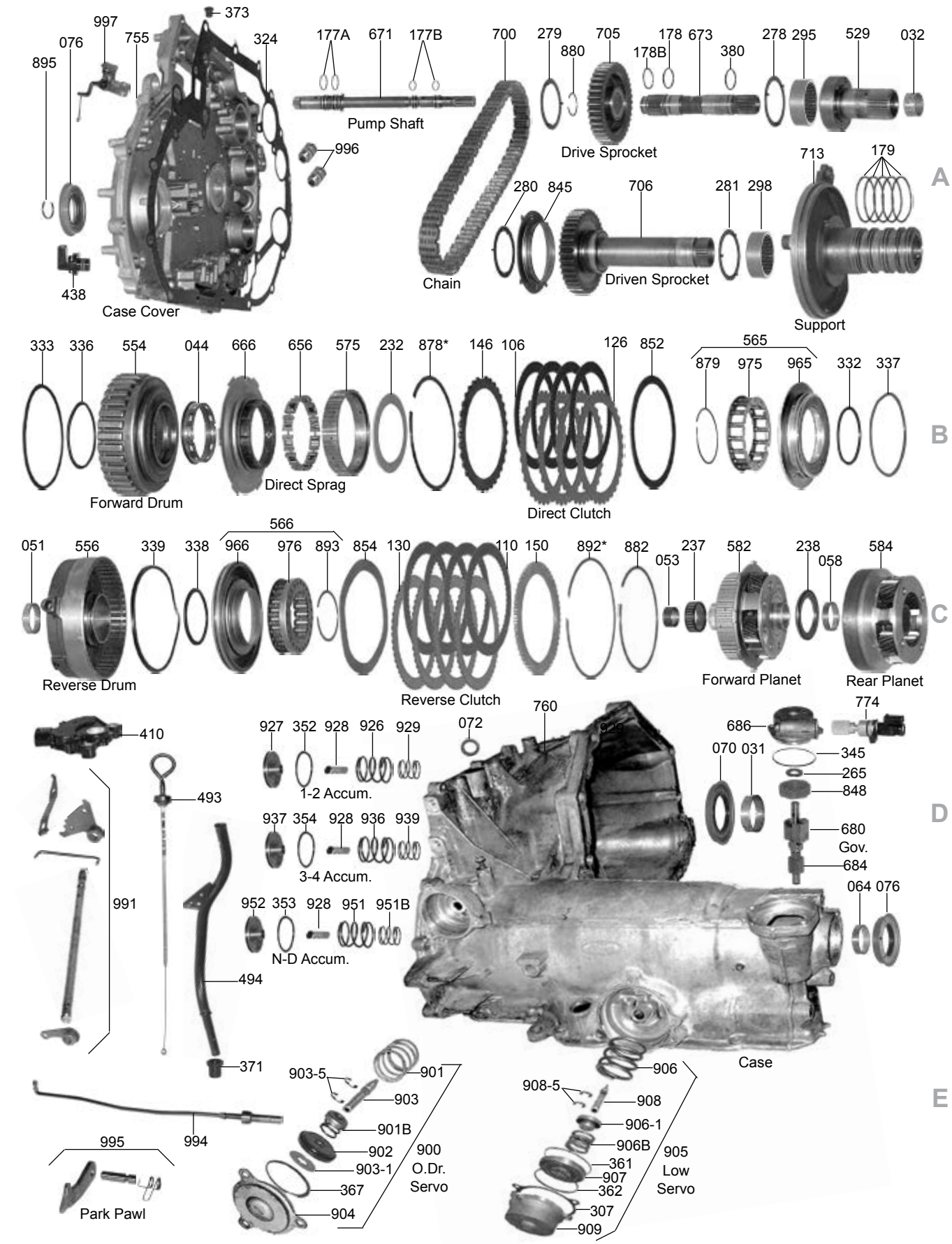
A
373
997
076
755
324
895
438
Case Cover
177A
671
177B
Pump Shaft
996
700
Chain
279
880
705
Drive Sprocket
178
178B
673
380
278
295
529
032
280
845
706
Driven Sprocket
281
298
713
179
Support
B
333
336
554
Forward Drum
044
666
Direct Sprag
656
575
232
878*
146
106
126
852
Direct Clutch
565
879
975
965
332
337
C
051
556
Reverse Drum
339
338
566
966
976
893
854
130
Reverse Clutch
110
150
892*
882
053
237
582
Forward Planet
238
058
584
Rear Planet
D
410
493
991
494
371
927
352
928
926
929
1-2 Accum.
937
354
928
936
939
3-4 Accum.
952
353
928
951
951B
N-D Accum.
072
760
686
774
070
031
345
265
848
680
Gov.
684
064
076
Case
E
903-5
901
903
901B
902
903-1
367
904
900
O.Dr.
Servo
906
908-5
908
906-1
906B
361
907
362
307
909
905
Low
Servo
994
995
Park Pawl