AOD

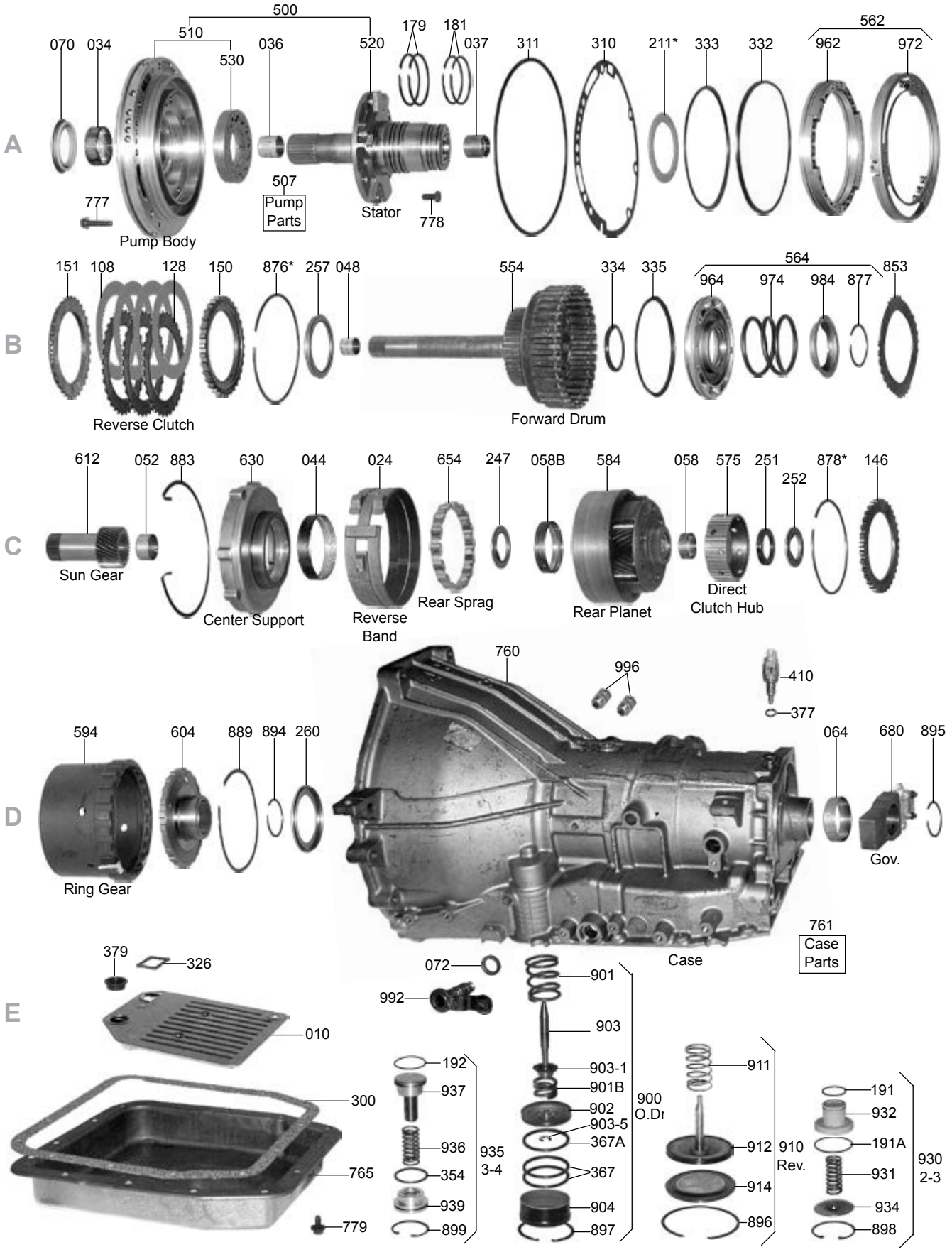
A
500
510
530
070
034
036
520
179
181
037
311
310
211*
333
332
562
962
972
507
Pump Parts
777
Pump Body
Stator
778
B
151
108
128
150
876*
257
048
554
334
335
564
964
974
984
877
853
Reverse Clutch
Forward Drum
C
612
052
883
630
044
024
654
247
058B
584
058
575
251
252
878*
146
Sun Gear
Center Support
Reverse Band
Rear Sprag
Rear Planet
Direct Clutch Hub
D
760
996
410
377
594
604
889
894
260
064
680
895
Ring Gear
Gov.
761
Case Parts
Case
E
379
326
072
901
992
903
010
192
903-1
911
937
901B
191
300
902
900 O.Dr
903-5
932
936
367A
912
910 Rev.
191A
935 3-4
354
367
930 2-3
765
939
914
931
904
934
779
899
897
896
898

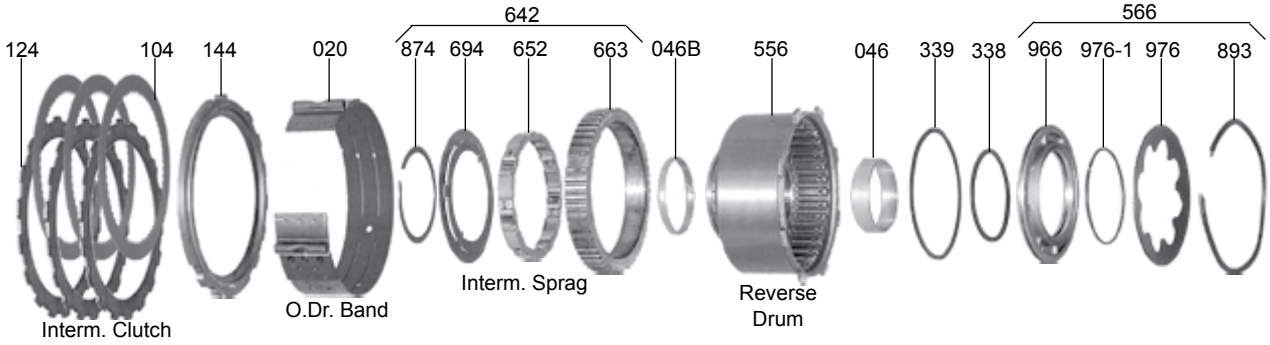
642
566
124
104
144
020
874
694
652
663
046B
556
046
339
338
966
976-1
976
893
Interm. Clutch
O.Dr. Band
Interm. Sprag
Reverse Drum

A

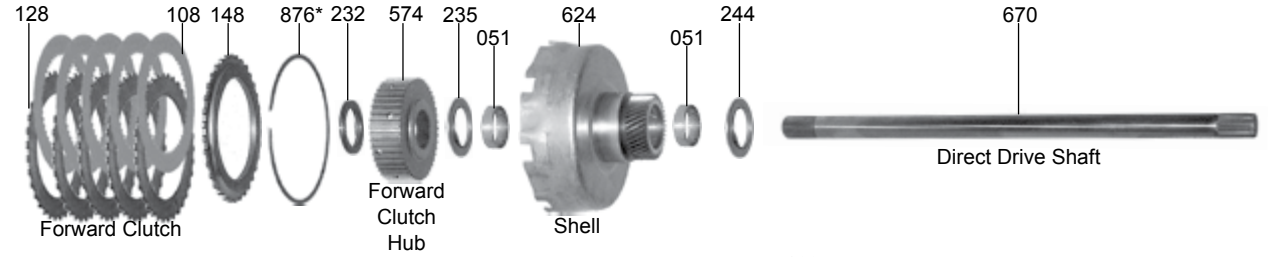
128
108
148
876*
232
574
235
051
624
051
244
670
Forward Clutch
Forward Clutch Hub
Shell
Direct Drive Shaft

B

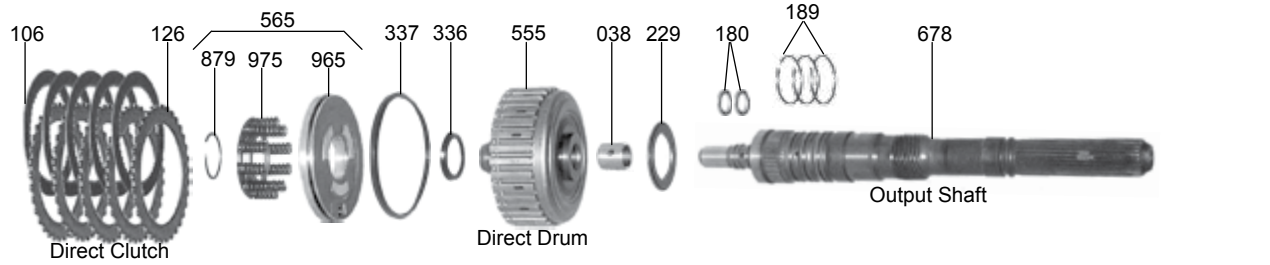
106
126
565
879
975
965
337
336
555
038
229
180
189
678
Direct Clutch
Direct Drum
Output Shaft

C

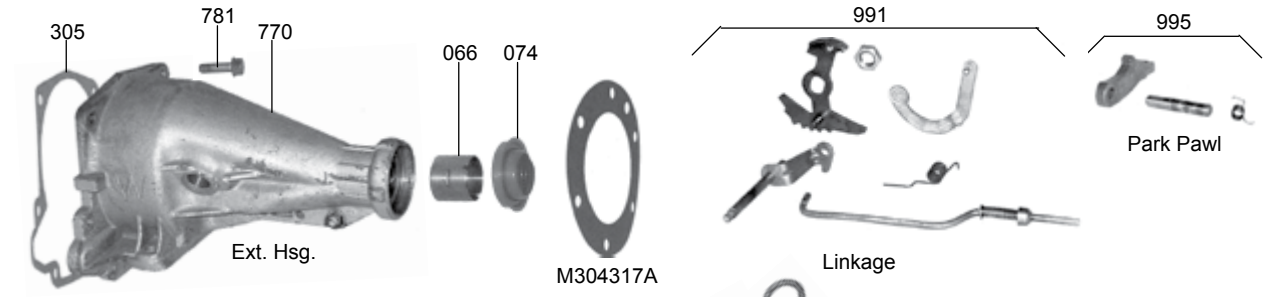
305
781
770
066
074
991
995
Ext. Hsg.
M304317A
Linkage
Park Pawl

D

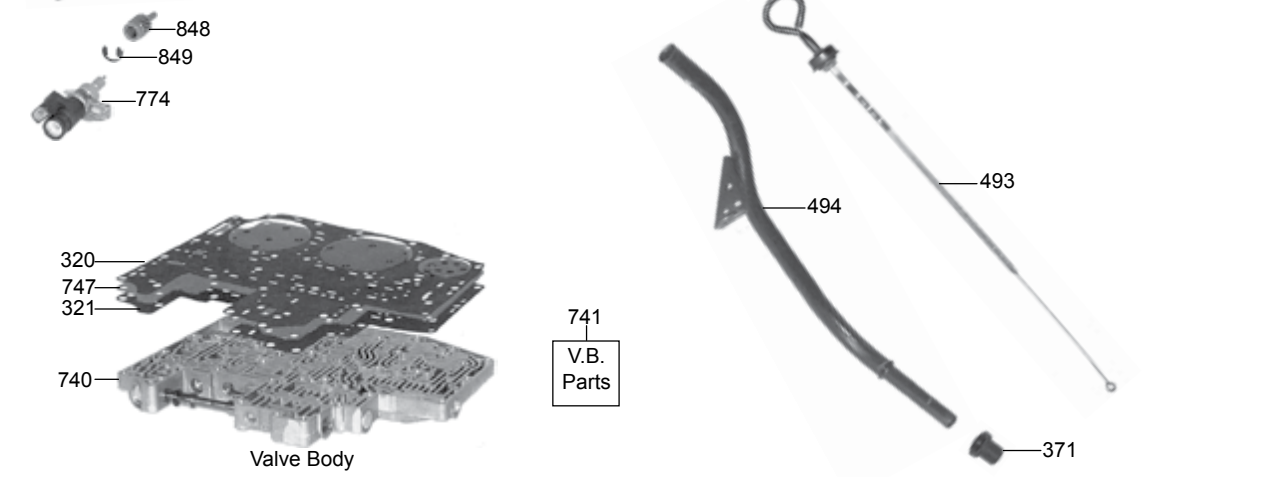
848
849
774
493
494
320
747
321
740
741
V.B. Parts
371
Valve Body

E