# TF-8, A727

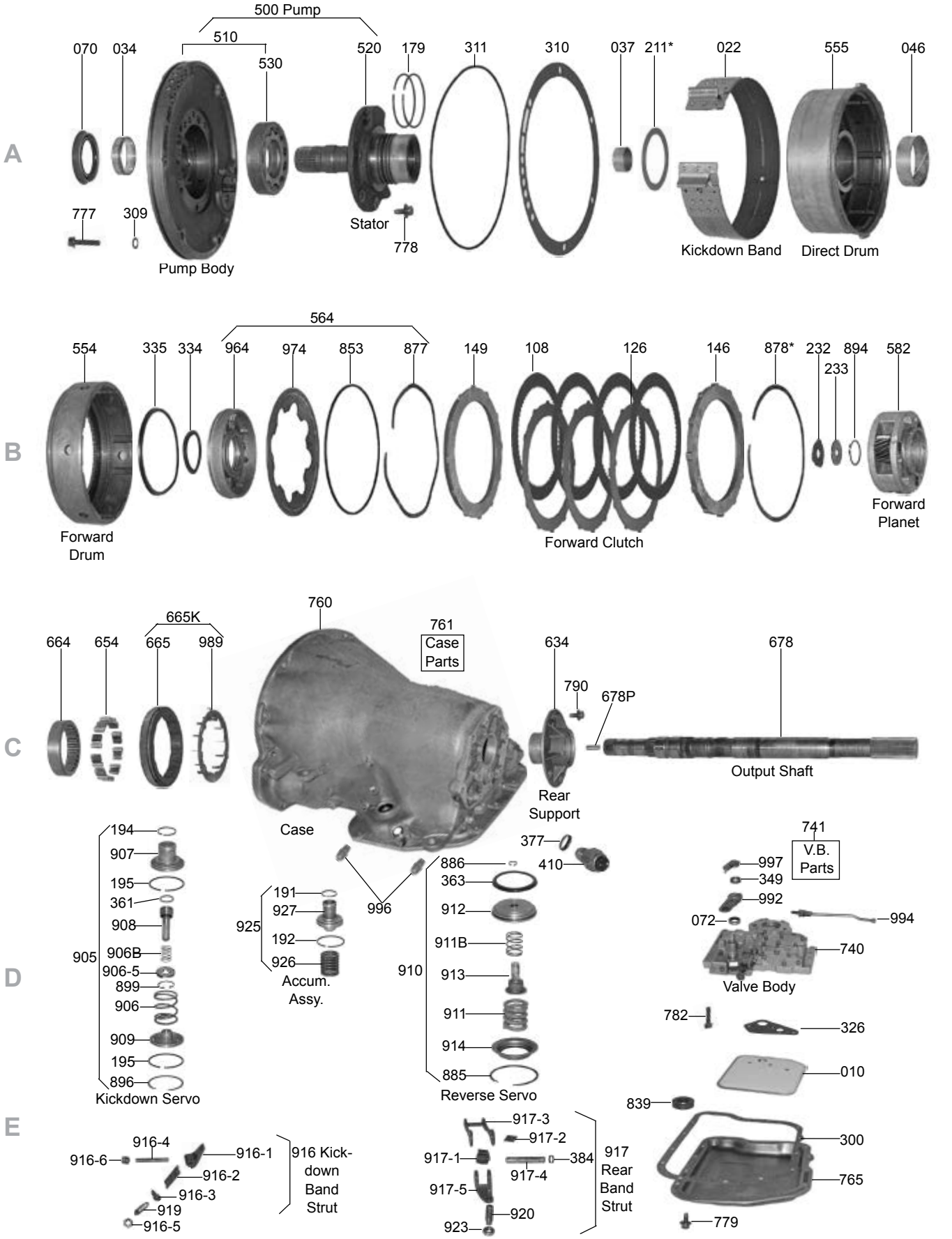
A
500 Pump
510
070
034
530
520
179
311
310
037
211*
022
555
046
777
309
Stator
778
Pump Body
Kickdown Band
Direct Drum
B
564
554
335
334
964
974
853
877
149
108
126
146
878*
232
233
894
582
Forward Drum
Forward Clutch
Forward Planet
C
665K
664
654
665
989
760
761
Case Parts
634
790
678P
678
Output Shaft
Rear Support
Case
D
194
907
195
361
908
905
906B
906-5
899
906
909
195
896
Kickdown Servo
191
927
925
192
926
Accum. Assy.
996
377
410
886
363
912
910
911B
913
911
914
885
Reverse Servo
741
V.B. Parts
997
349
992
072
994
740
Valve Body
782
326
010
839
300
765
779
E
916-4
916-6
916-1
916-2
916-3
919
916-5
916 Kick-down Band Strut
917-3
917-2
917-1
384
917-4
917-5
920
923
917 Rear Band Strut

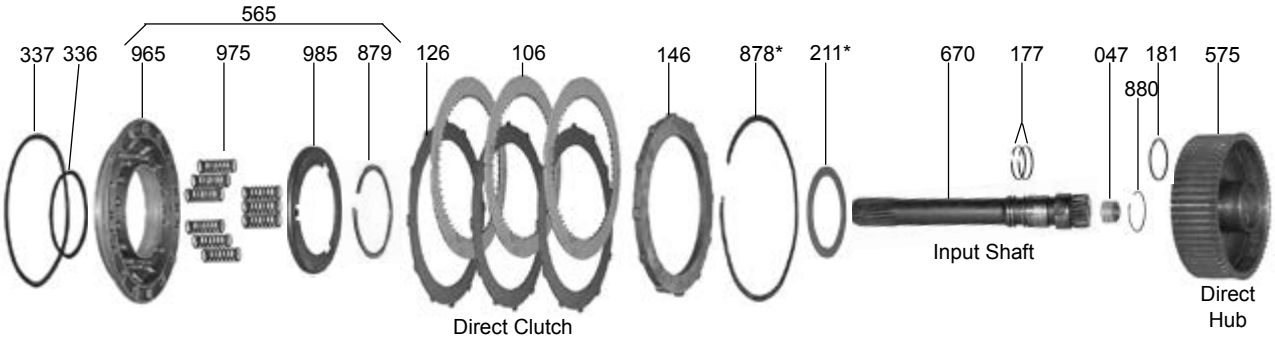
565
337 336
965
975
985
879
126
106
146
878*
211*
670
177
047
181
880
575
Input Shaft
Direct Clutch
Direct Hub

A

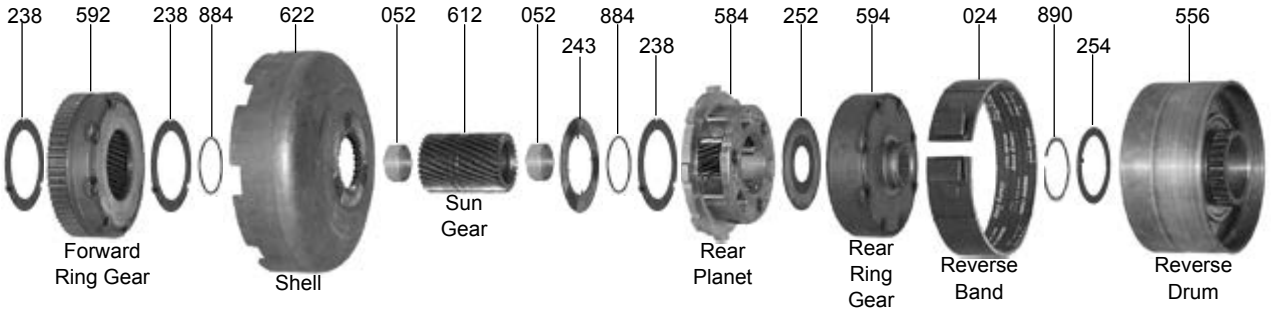
238
592
238
884
622
052
612
052
884
243
238
584
252
594
024
890
254
556
Forward Ring Gear
Shell
Sun Gear
Rear Planet
Rear Ring Gear
Reverse Band
Reverse Drum

B

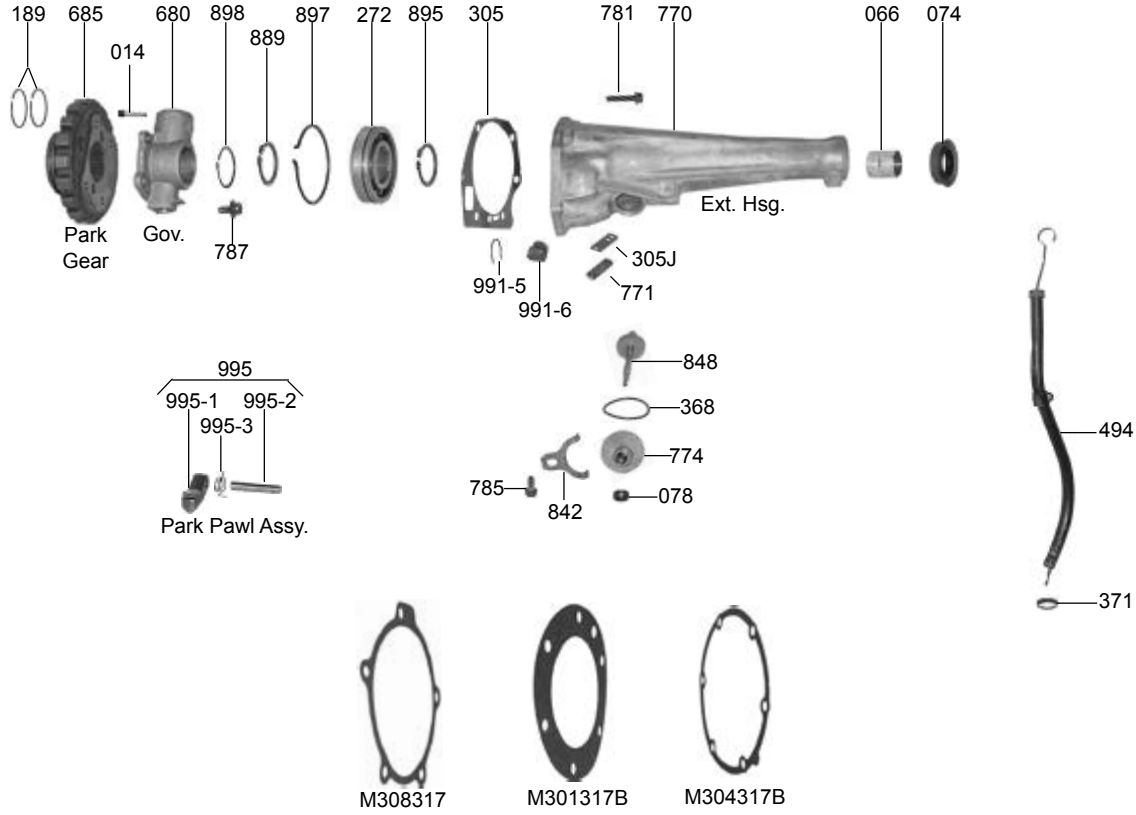
189
685
680
898
897
272
895
305
781
770
066
074
014
889
Park Gear
Gov.
787
Ext. Hsg.
991-5
991-6
305J
771
995
995-1
995-2
995-3
Park Pawl Assy.
848
368
774
785
842
078
494
371
M308317
M301317B
M304317B

C

D

E